WE RESERVE ALL RIGHTS IN THIS DOCUMENT AND IN THE INFORMATION CONTAINED THERIN. REPRODUCTION, USE OR DISCLOSURE TO THIRD PARTIES WITHOUT EXPRESS AUTHORITY IS STRICTLY FORBIDDEN!

FUER DIESES DOKUMENT UND DEN DARIN DARGESTELLTEN GEGENSTAND BEHALTEN WIR UNS ALLE RECHTE VOR. VERVIELFALTIGUNG, BEKANNTGABE AN DRITTE ODER VERWENDUNG SEINES INHALTS SIND OHNE UNSERE AUSDRUECKLICHE ZUSTIMMUNG VERBOTEN!

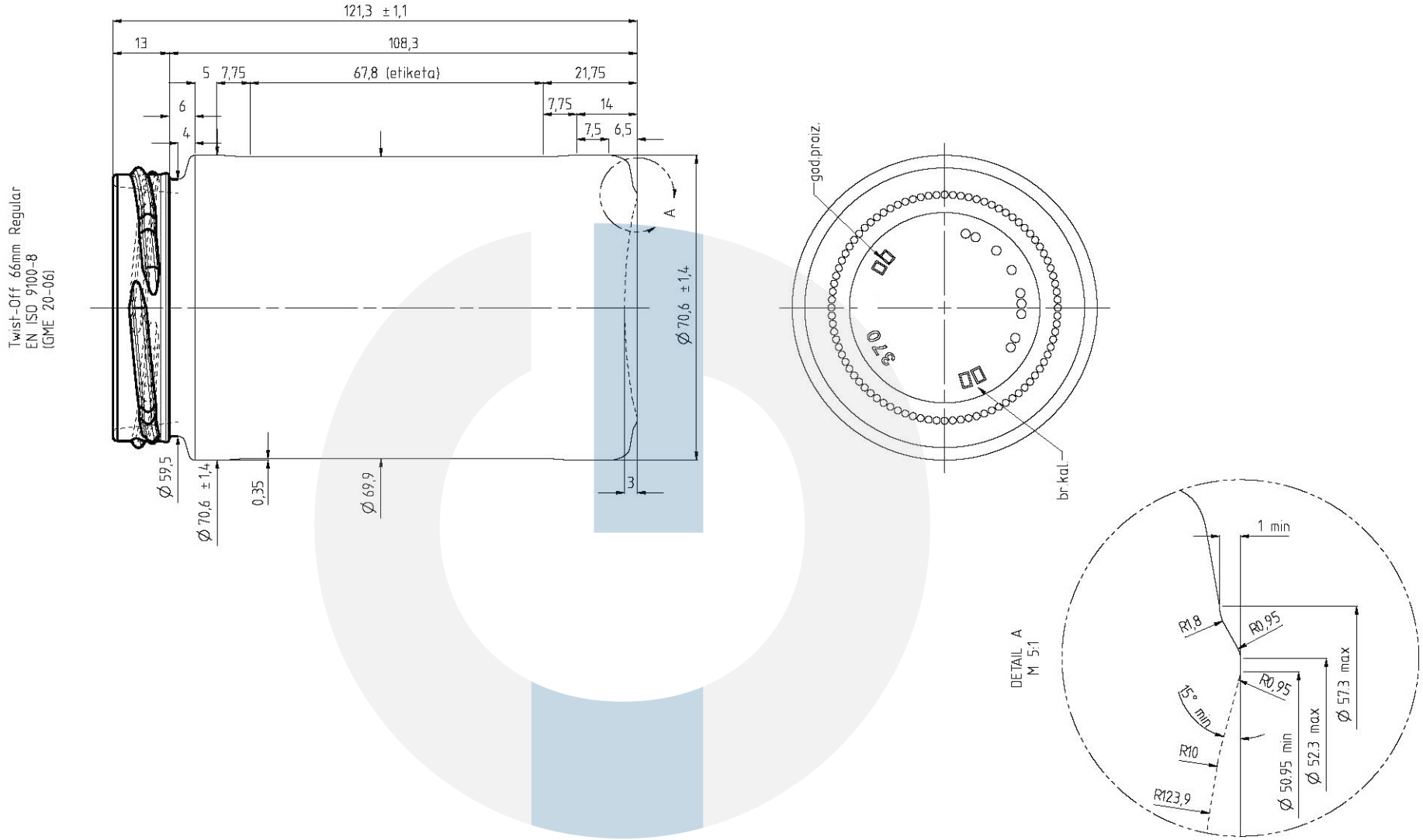

INDEX	PROMJENE / modifications	DAT	NAME
B	promjena pozicije kada/promjena dizajna boce kod dna.	23.01.17	Hs
C	povecano zastitno podrucje za etiketu (gore i dolje) za 0,1mm,	23.01.18	Hs

PT ODOBREN / PT approved		DAT 23.01.18	VIS
PtP ODOBREN / FtB released	STAKLANA	DAT 23.01.18	VIS
	VST		
	STAKLANA	DAT	VIS
FS ODOBREN / FS approved	STAKLANA	DAT 23.01.18	VIS
	VST		

NETOLERIRANE MJERE
PERMA DIN 6129

dimensions without tolerances
conform to standard DIN 6129

TEMP. PUNJENJA / Filling temperature	≤ 90 °C
TEMPERATURA OBRADE / Conditioning temperature	≤ 90 °C
SADRZAJ CO_2 / CO_2 content	≤ g/l
SADRZAJ ALKOHOLA / Alcohol content	≤ Vol%
PRITISAK ZATVARANJA / Axial pressure	180 daN

UPOTREBA / Disposal	MW	AW	EW
			X
PROCES / Process	BB	PB	EPB
		X	

NAZIVNI SADRZAJ / Capacity fillpoint	ml ± ml
SADRZAJ DO VRHA / Capacity brimful	370 ml ± 11.1 ml
TEZINA / Approx. glass weight	180 g
PROSJECNA DEBLJINA STIJENKE / Average wall thickness	2,30 mm
PROMJER VRATA / Neck connection dia.	59,5 mm
MIN PROLAZ KROZ VRAT / Min. through bore	mm
BOJA / Color	WE

NAPOMENA / Remarks	Dev.Ord.004652
KUPAC / Customer	standardni proizvod free product
SLICNO SA / Similar to	
MJENJA BR / Replace No	6N084.0370.6080_B
PONUDA BROJ / Offer No	E6N0316.0370.6080_F
MJERILO / Scale	1:1
KONSTR / Des	Hs
DAT	23.01.18
TIP PODATKA / Filetyp	AZ

CENTERGLASSLINE

NAZIV ARTIKLA / Designation: Elegant 180g TO66RH 370ml

BR. ARTIKLA / Item No: 6N084.0370.6080

INDEX: C

Date: 07-Mar-18 Time: 10:27 Message: Vetropack to SAP released drawing: Original is archived at the designoffice